EV West - AC-35/50/75 Curtis 1238 Hall / Prius Throttle Schematic
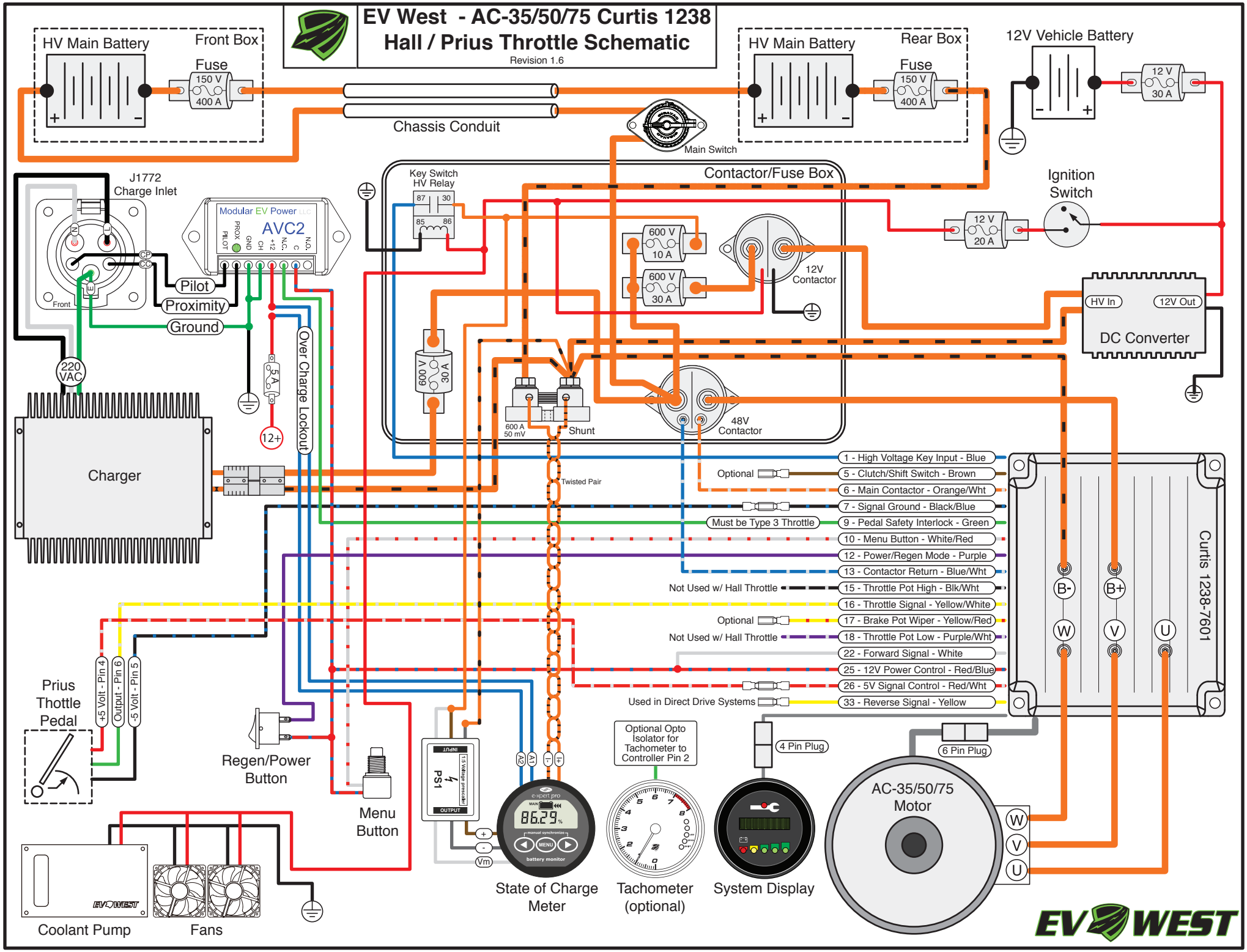
Revision 1.6