EV West - Dilithium BMS Power and Warning Light Loops
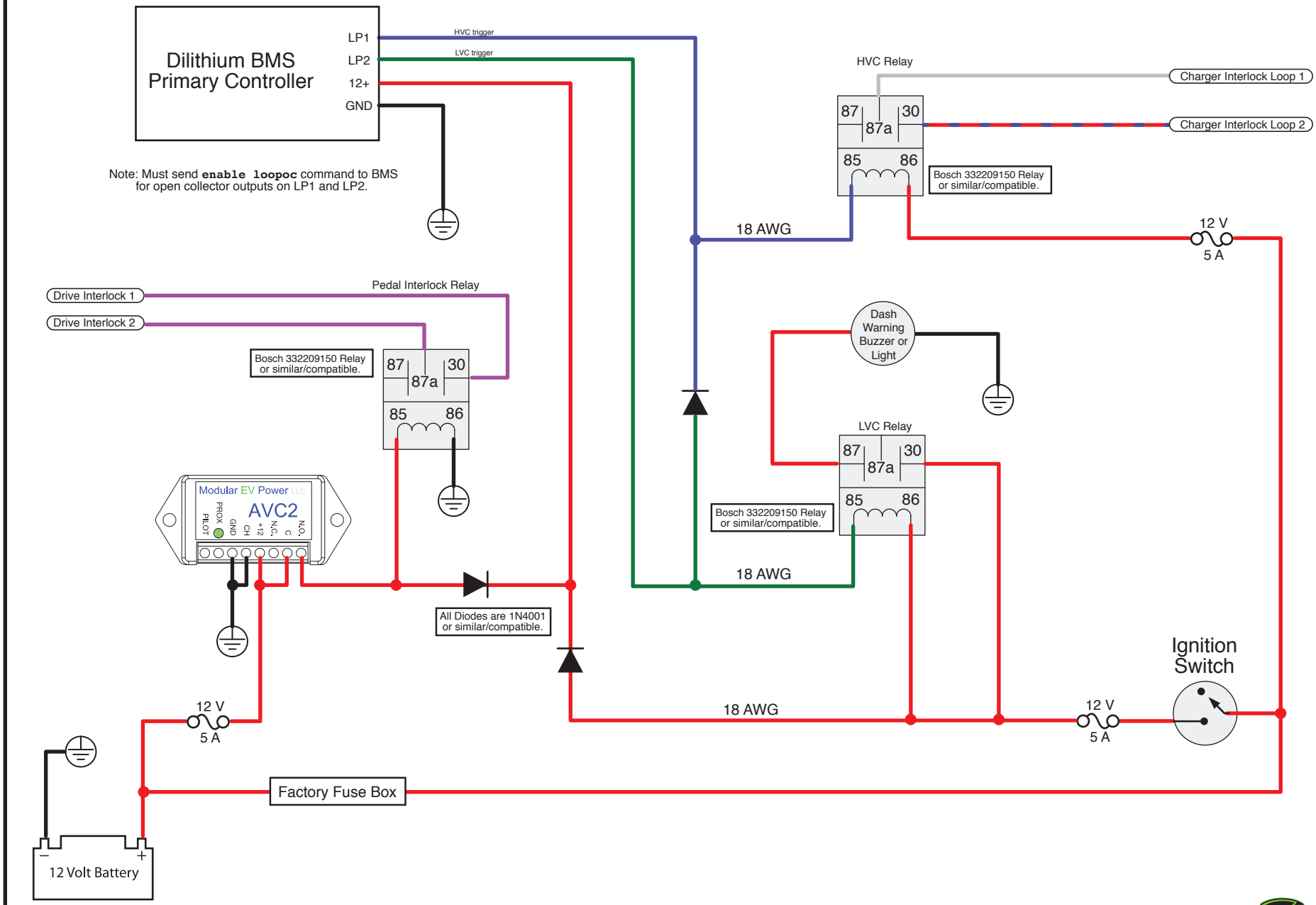
Revision 1.1 - 2/21